FIRST ANGLE PROJECTION

(ALL DIMENSIONS ARE IN mm)

DRG. NO. 2 439 20 01 002

THE INFORMATION ON THIS DOCUMENT IS THE PROPERTY OF BHARAT HEAVY ELECTRICALS LIMITED.
IT MUST NOT BE USED DIRECTLY OR INDIRECTLY IN ANY WAY DETRIMENTAL TO THE INTEREST OF THE COMPANY.

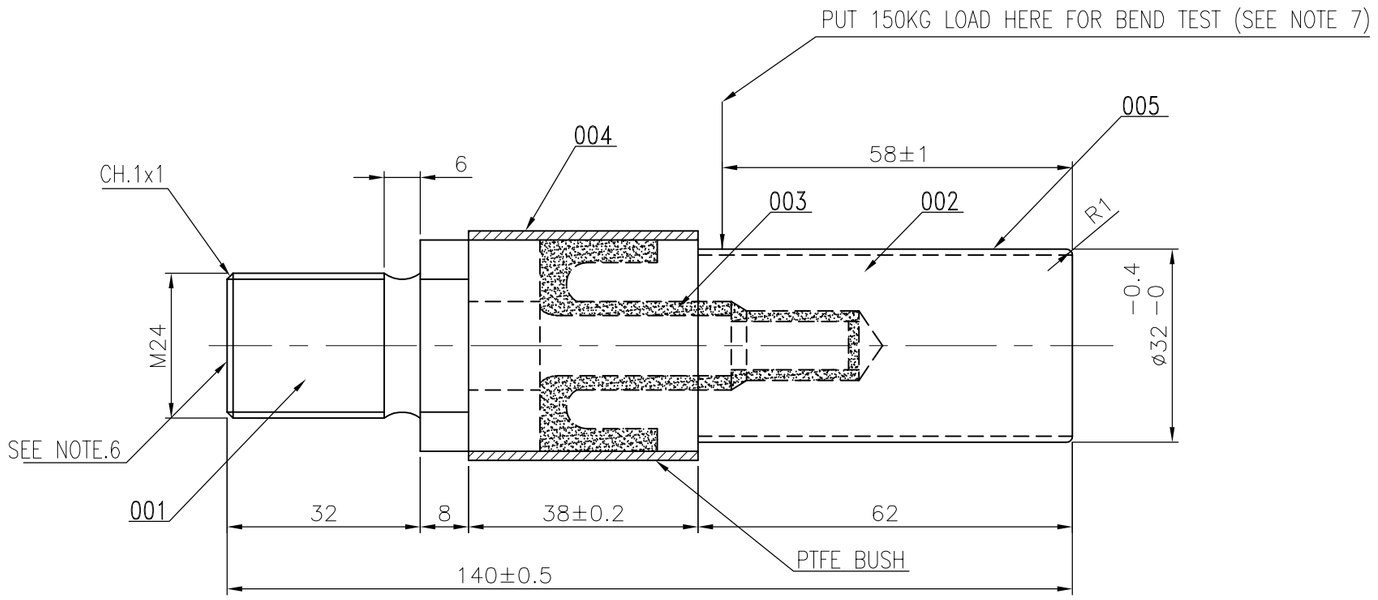

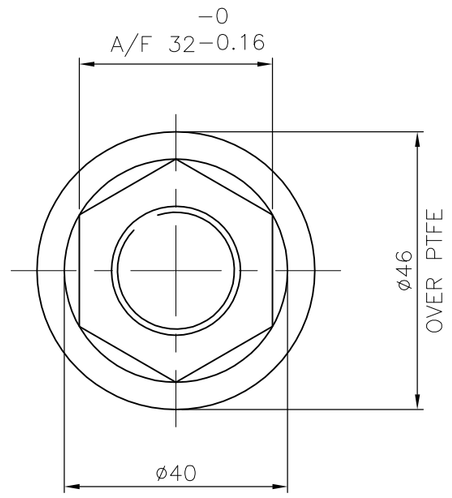

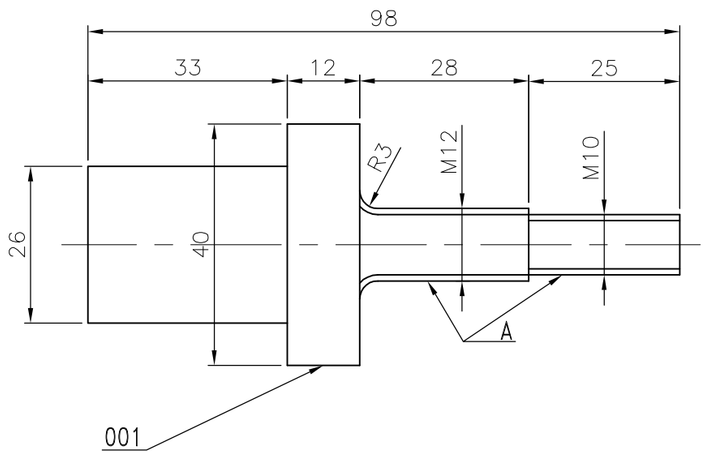

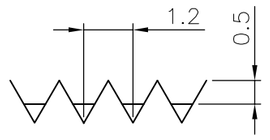

VIEW-'A'

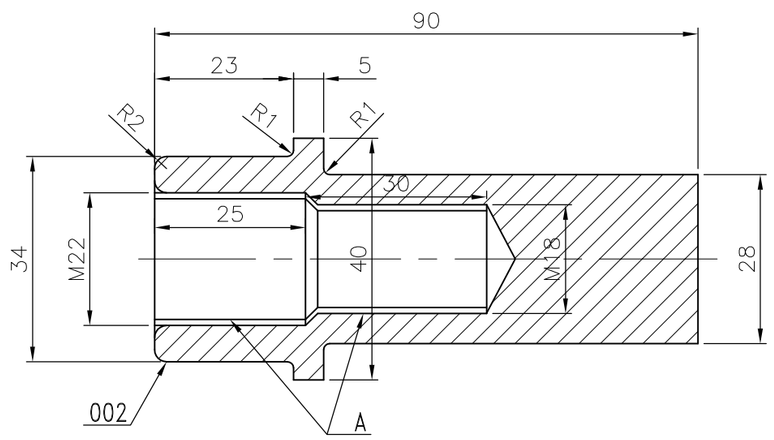

TESTS:-

ROUTINE TESTS:

1. HV TEST 9KV FOR 1MIN.
2. INSULATION RESISTANCE 400 MEGAOHMS MINIMUM AT ROOM TEMP WITH 1000V. MEGGER AS PER CL.6.2, 6.3 OF TM 97246
3. TORQUE TEST :20KGM MIN. ON EACH CONSIGNMENT
4. TENSILE STRENGTH:1000KG ON EACH CONSIGNMENT.

TYPE TESTS: (TO BE CONDUCTED ONCE IN TWO YEARS)

1. INSULATION RESISTANCE AT 100°C UNDER CLAMPED CONDITION 200 MEGAOHMS MINIMUM
2. BDV AT ROOM TEMPERATURE (12 KV.MINIMUM)
3. BOILING WATER TEST AS PER PRS.TM 97246 CL.7.2

NOTES:-

1. ITEM 1&2 TO BE ZINC PLATED TO AA 0673603 & PASSIVATED TO AA 0673604 WITH A PLATING THICKNESS OF 0.013 TO 0.025 MM.
2. FOR ITS. 1&2 √ALL OVER.
3. AFTER ASSEMBLY OF IT.1&2, THE SURFACE OF IT.2 SHOULD BE CONCENTRIC WITH THE AXIS OF IT.1 WITHIN 0.3MM
4. ALL UNTOLERATED DIMENSION ARE ASPER PROD.STD. AA 0230208 GR.M.
5. IT.5 TO BE MOULDED ON IT.2 AS PER PR.SPEC TM-97246, WITH MULTIPLE LAYERS
6. IDENTIFICATION MARK OF SUPPLIER TO BE PUNCHED IN 5MM HEIGHT AT STUD FACE AS SHOWN IN VIEW.
7. BRUSH HOLDER ARM TO WITHSTAND BENDING STRENGTH OF 150 KG AS SHOWN.

VAR.OO (59–64)	REMARKS (65–75)	VAR NO. (78 79)	ITEM NO. (25–27)	DESCRIPTION (29–58)	STD. (59)	DRAWING NO. (60–77)	IT.NO. (29 31) / VAR. (32 33)	MATL. CODE (34–45) / MATL. SPCN. (46–54)	A C (55)	UNIT (56–57)	UNIT WT. (58–65) / QTY. (68–71)	GS (72)	ZONE
001	SEE NOTE 5		005	GLASS CLOTH 0.18TK				AA 25601		KG	0.050		
001			004	PTFE 3TKx38LG.						KG	0.020		
001			003	GLASS BONDED MICA						KG	0.020		
001			002	STEEL INSERT ø40x90LG				AA10112		KG	0.300		
001			001	STEEL INSERT ø40x98LG	1			AA10112		KG	0.300		

28 → CARD TYPE-3 | 28 → CARD TYPE-1 | 28 → CARD TYPE-2

REV.	DATE			ZONE	
09	21.10.17	ALTERED	SDB	ZONE	DRAWING DIGITIZED.
		CHECKED	SERVESH		
		APPD.	SERVESH		
08	17.08.07	ALTERED	DK	ZONE	IN NOTE-1 PLATING THK. 0.013 TO 0.025 WAS 0.013 TO 0.015.
		CHECKED	DK		
		APPD.	-sd-		
07	13.08.02	ALTERED	-sd-	ZONE	NOTE-7 WAS NOT ON & VIEW REF. (A/3) DIM. 58±1 WAS NOT ON.
		CHECKED	-sd-		
		APPD.	-sd-		
06	16.07.02	ALTERED	-sd-	ZONE	IN REF. (AB/5&1) DIMS. 40,46 WERE 36,42. SEE NOTE-6 AND R1,2,3 WERE NOT ON. DIM. 28 WAS 32. NOTES-5 & 3 CORRECTED. NOTE-6 WAS NOT ON AND VIEW MODIFIED.
		CHECKED	-sd-		
		APPD.	-sd-		
05	07.05.02	ALTERED	-sd-	ZONE	VIEW OF IT.001 & 002 MODIFIED VIEW 'A' WAS NOT ON.
		CHECKED	-sd-		
		APPD.	-sd-		
04	18.04.01	ALTERED	-sd-	ZONE	IN VIEW REF. (A/5) DIM. 42 WAS 46 & TEST-2 WITH 1000V. MEGGER AS PER CL.6.2, 6.3 OF TM97246 WAS NOT ON.
		CHECKED	-sd-		
		APPD.	-sd-		
03	11.05.2K	ALTERED	-sd-	ZONE	TYPE TEST-3 WAS NOT ON & NOTE-6 WAS ON.
		CHECKED	-sd-		
		APPD.	-sd-		
02	18.03.2K	ALTERED	-sd-	ZONE	ROUTINE TEST 3 & 4 MODIFIED & NOTES-5 & 6 WERE NOT ON & IN BOM IT.005 WAS NOT ON. R1 WAS CH. 2x2. BZ WAS AZ.
		CHECKED	-sd-		
		APPD.	-sd-		
01	28.07.99	ALTERED	-sd-	ZONE	IN VIEW IT.002, ø29 WAS 32. & NOTE-3 & 4 WERE NOT ON.
		CHECKED	-sd-		
		APPD.	-sd-		

ADDITIONAL INFORMATION

STATUS OF DRAWING

DISTRIBUTION OF PRINTS

TME-1 TXM-3
TIX-1 TNX-1

TYPE OF PRODUCT OR NAME OF CUSTOMER/PROJECT: TM 4906 AZ /BZ, TM 4907 BZ

BHARAT HEAVY ELECTRICALS LTD. BHOPAL

	NAME	SIGN	DATE
DRN	SUSHMA	Sd	23.09.98
CKD	SGD	Sd	24.09.98
APPD	KDG	Sd	14.10.98

NO. OF VAR.: 01

DEPT.	GRRADE OFUNTOL. DIM. C/M/F	SCALE	WEIGHT(K.G.)	REF.TO ASSY.DRG.	ITEM NO.	NO.OF ITEM
T.M.E. CODE 405		NTS	0.690	2 439 20 01 001	002	005

TITLE: MYCALEX BRUSH HOLDER SUPPORT PIN(TWO PIECE)

DRAWING NO. 2 439 20 01 002 — REV. 09

SHT. NO. 01 — NO. OF SHT. 01

A2 SIZE